STF100N6F7

N-channel 60 V, 4.6 mΩ typ., 46 A STripFET™ F7 Power MOSFET in a TO-220FP package

Datasheet - production data

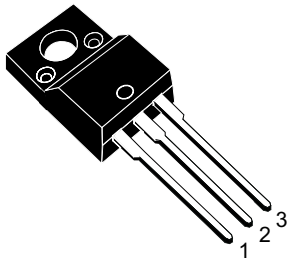

TO-220FP

Figure 1. Internal schematic diagram

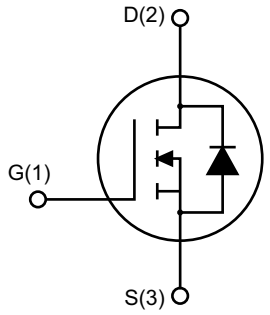

Features

Order code	V_{DS}	$R_{DS(on)}$ max.	I_D	P_{TOT}
STF100N6F7	60 V	5.6 mΩ	46 A	25 W

- Among the lowest $R_{DS(on)}$ on the market
- Excellent figure of merit (FoM)
- Low C_{rss}/C_{iss} ratio for EMI immunity
- High avalanche ruggedness

Applications

- Switching applications

Description

This N-channel Power MOSFET utilizes STripFET™ F7 technology with an enhanced trench gate structure that results in very low on-state resistance, while also reducing internal capacitance and gate charge for faster and more efficient switching.

Table 1. Device summary

Order code	Marking	Package	Packaging
STF100N6F7	100N6F7	TO-220FP	Tube

This is information on a product in full production. www.st.com

Contents

1 Electrical ratings 3

2 Electrical characteristics 4

2.1 Electrical characteristics (curves) 6

3 Test circuits 8

4 Package mechanical data 9

5 Revision history 12

1 Electrical ratings

Table 2. Absolute maximum ratings

Symbol	Parameter	Value	Unit
V_{DS}	Drain-source voltage	60	V
V_{GS}	Gate-source voltage	±20	V
I_D	Drain current (continuous) at T_C = 25 °C	46(1)	A
I_D	Drain current (continuous) at T_C = 100 °C	33(1)	A
I_{DM}(2)	Drain current (pulsed)	184	A
P_{TOT}	Total dissipation at T_C = 25 °C	25	W
E_{AS}(3)	Single pulse avalanche energy	200	mJ
dV/dt(4)	Drain-body diode dynamic dV/dt ruggedness	6	V/ns
V_{ISO}	Insulation withstand voltage (RMS) from all three leads to external heat sink (t = 1 s; T_C= 25 °C)	2500	V
T_j	Operating junction temperature	-55 to 175	°C
T_{stg}	Storage temperature		

1. Limited by package
2. Pulse width is limited by safe operating area
3. Starting T_J = 25 °C, I_D = 20 A, V_{DD} = 30 V
4. I_{SD}= 46 A; di/dt = 600 A/µs; V_{DD} = 48 V; T_j < Tjmax

Table 3. Thermal data

Symbol	Parameter	Value	Unit
$R_{thj\text{-}case}$	Thermal resistance junction-case	6	°C/W
$R_{thj\text{-}amb}$	Thermal resistance junction-ambient	62.5	°C/W

2 Electrical characteristics

(T_{CASE} = 25 °C unless otherwise specified)

Table 4. On/off states

Symbol	Parameter	Test conditions	Min.	Typ.	Max.	Unit
$V_{(BR)DSS}$	Drain-source breakdown voltage	V_{GS} = 0 V, I_D = 1 mA	60			V
I_{DSS}	Zero gate voltage Drain current	V_{GS} = 0 V, V_{DS} = 60 V			1	µA
		V_{GS} = 0 V, V_{DS} = 60 V, T_J = 125 °C			100	µA
I_{GSS}	Gate-source leakage current	V_{DS} = 0 V, V_{GS} = 20 V			100	nA
$V_{GS(th)}$	Gate threshold voltage	V_{DS} = V_{GS}, I_D = 250 µA	2		4	V
$R_{DS(on)}$	Static drain-source on-resistance	V_{GS} = 10 V, I_D = 23 A		4.6	5.6	mΩ

Table 5. Dynamic

Symbol	Parameter	Test conditions	Min.	Typ.	Max.	Unit
C_{iss}	Input capacitance	V_{GS} = 0 V, V_{DS} = 25 V, f = 1 MHz	-	1980	-	pF
C_{oss}	Output capacitance		-	970	-	pF
C_{rss}	Reverse transfer capacitance		-	86	-	pF
Q_g	Total gate charge	V_{DD} = 30 V, I_D = 46 A, V_{GS} = 10 V	-	30	-	nC
Q_{gs}	Gate-source charge		-	12.6	-	nC
Q_{gd}	Gate-drain charge		-	5.9	-	nC

Table 6. Switching times

Symbol	Parameter	Test conditions	Min.	Typ.	Max.	Unit
$t_{d(on)}$	Turn-on delay time	V_{DD} = 30 V, I_D = 23 A R_G = 4.7 Ω, V_{GS} = 10 V	-	21.6	-	ns
t_r	Rise time		-	55.5	-	ns
$t_{d(off)}$	Turn-off-delay time		-	28.6	-	ns
t_f	Fall time		-	15	-	ns

Table 7. Source drain diode

Symbol	Parameter	Test conditions	Min.	Typ.	Max.	Unit
V_{SD} (1)	Forward on voltage	V_{GS} = 0 V, I_{SD} = 46 A	-		1.2	V
t_{rr}	Reverse recovery time	I_{SD} = 46 A, di/dt = 100 A/µs, V_{DD} = 48 V	-	48.4		ns
Q_{rr}	Reverse recovery charge		-	47		nC
I_{RRM}	Reverse recovery current		-	2.0		A

1. Pulse test: pulse duration = 300 µs, duty cycle 1.5%

2.1 Electrical characteristics (curves)

Figure 2. Safe operating area

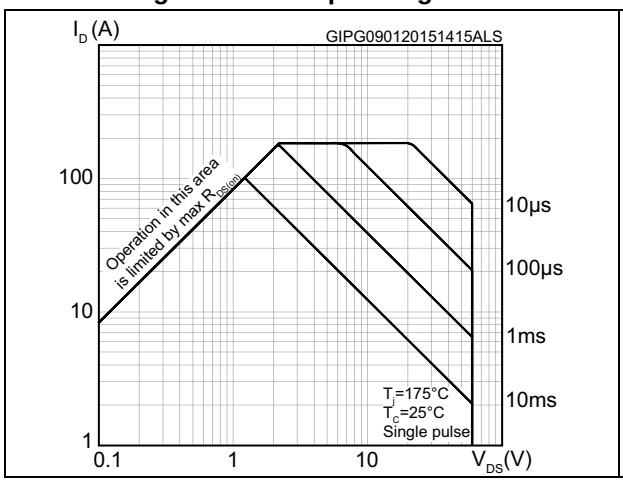

Figure 3. Thermal impedance

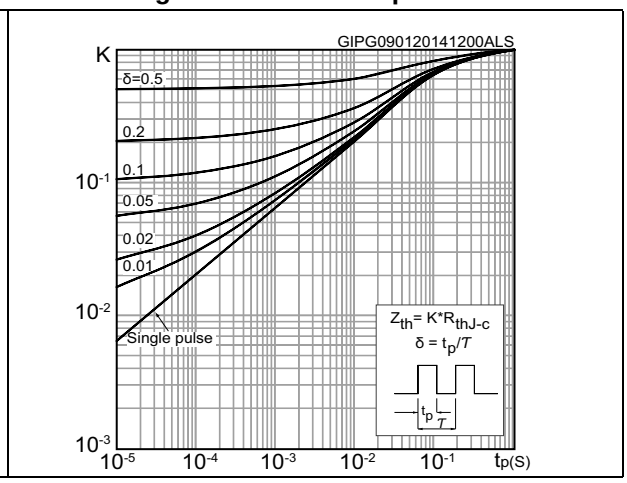

Figure 4. Output characteristics

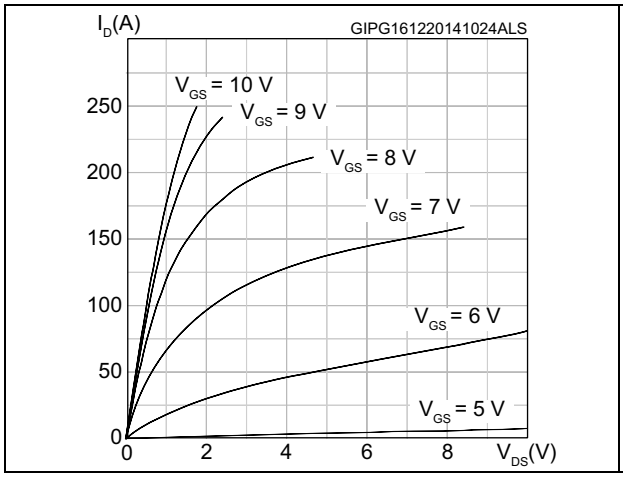

Figure 5. Transfer characteristics

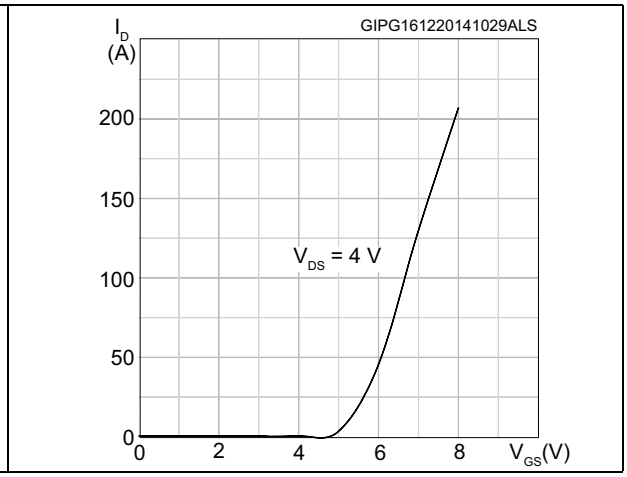

Figure 6. Gate charge vs gate-source voltage

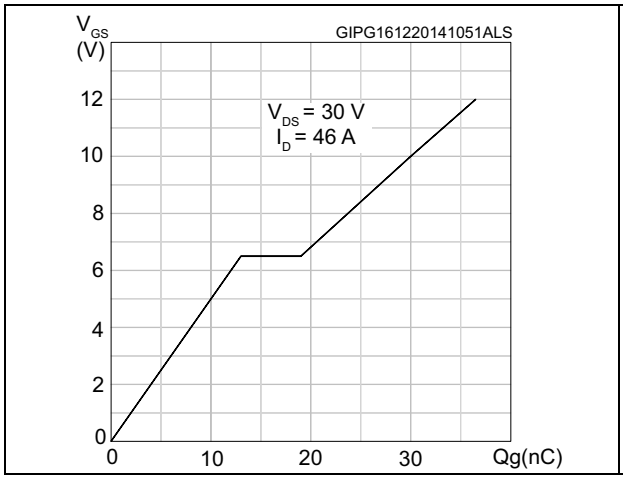

Figure 7. Static drain-source on-resistance

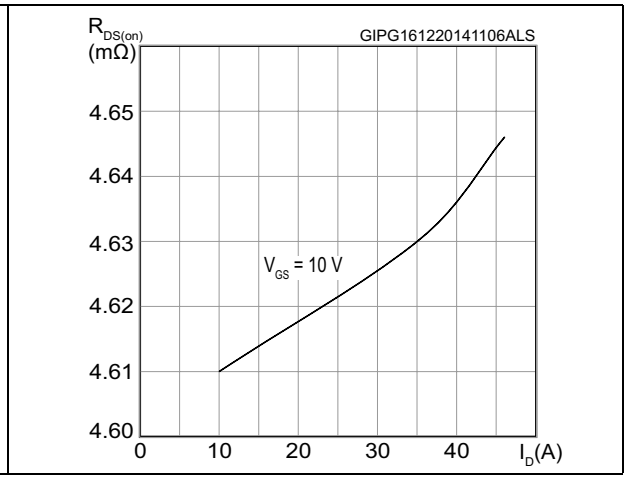

Figure 8. Capacitance variations

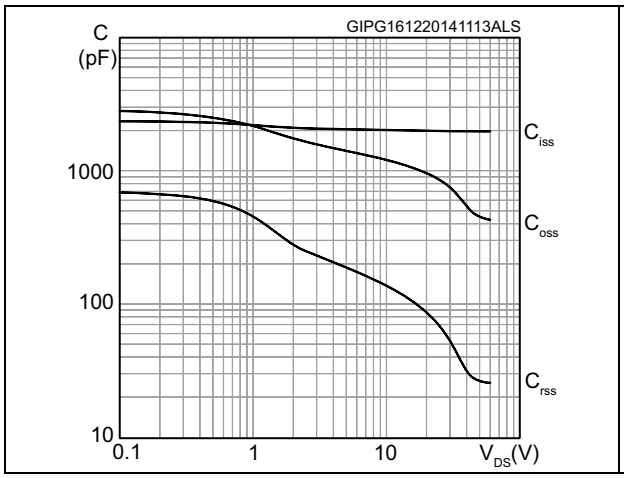

Figure 9. Normalized gate threshold voltage vs temperature

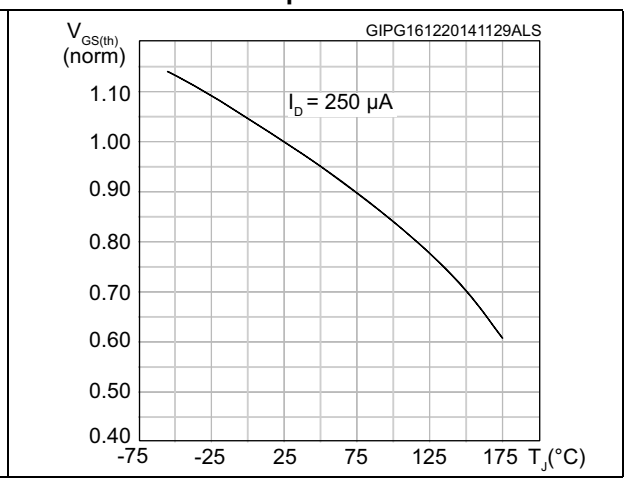

Figure 10. Normalized on-resistance vs temperature

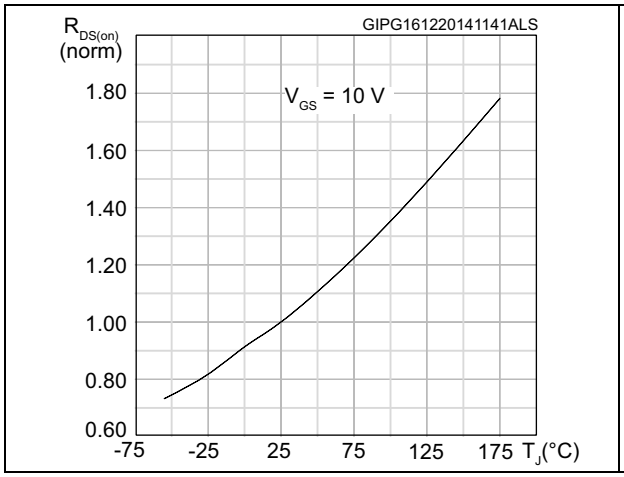

Figure 11. Source-drain diode forward characteristics

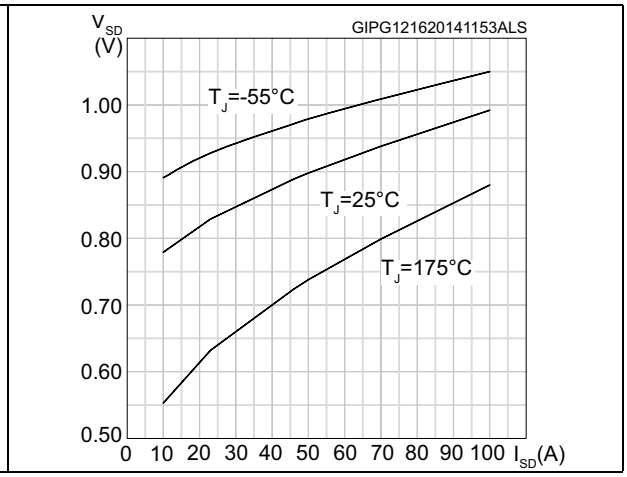

Figure 12. Normalized $V_{(BR)DSS}$ vs temperature

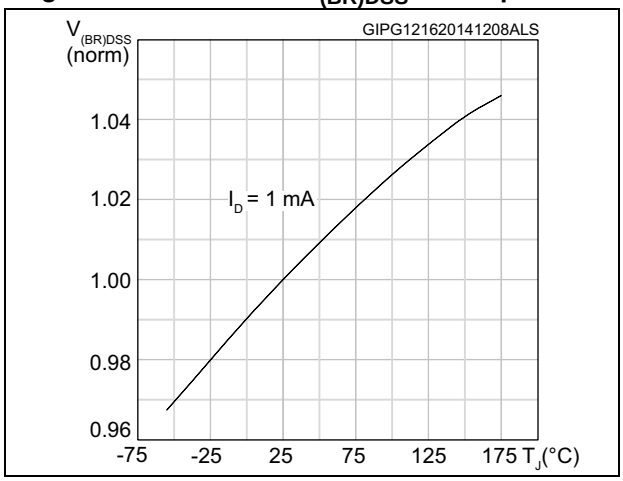

3 Test circuits

Figure 13. Switching times test circuit for resistive load

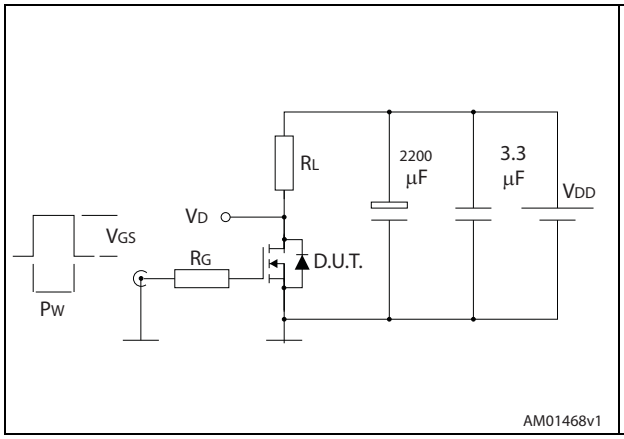

Figure 14. Gate charge test circuit

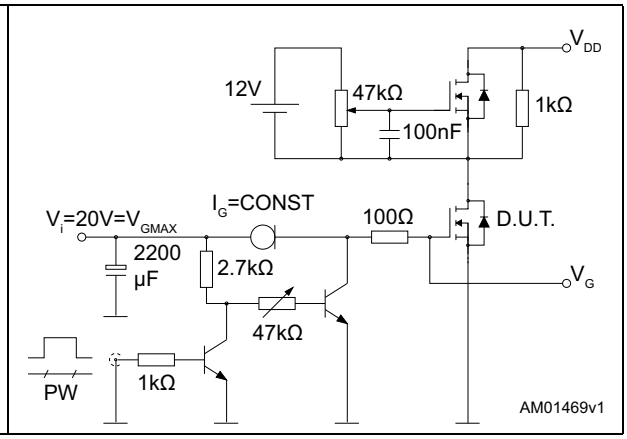

Figure 15. Test circuit for inductive load switching and diode recovery times

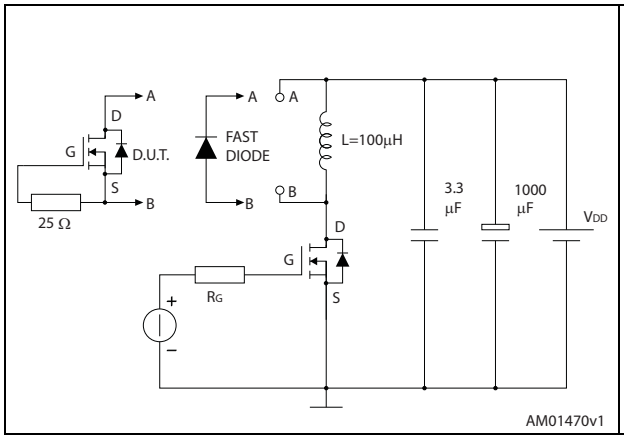

Figure 16. Unclamped inductive load test circuit

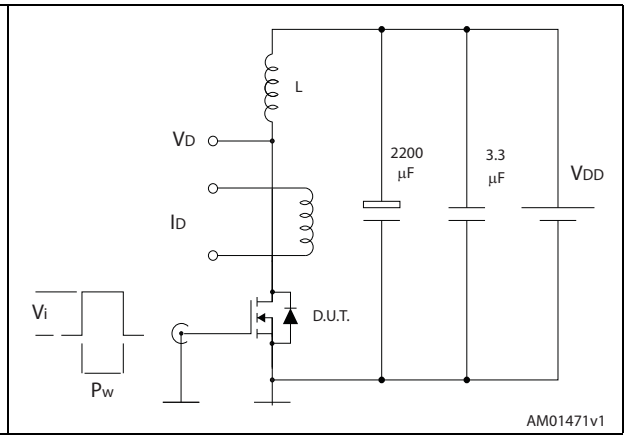

Figure 17. Unclamped inductive waveform

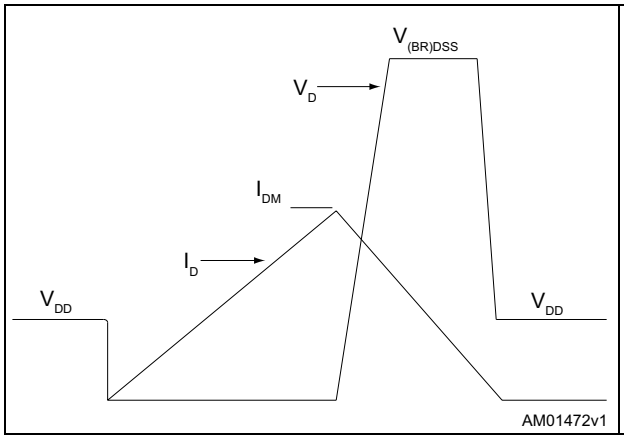

Figure 18. Switching time waveform

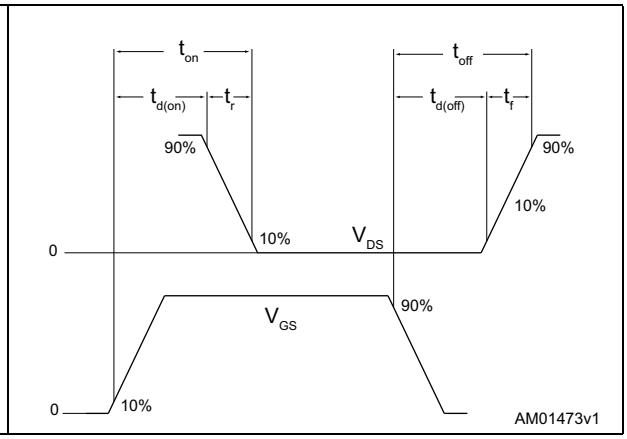

4 Package mechanical data

In order to meet environmental requirements, ST offers these devices in different grades of ECOPACK® packages, depending on their level of environmental compliance. ECOPACK® specifications, grade definitions and product status are available at: *www.st.com*. ECOPACK® is an ST trademark.

Figure 19. TO-220FP drawing

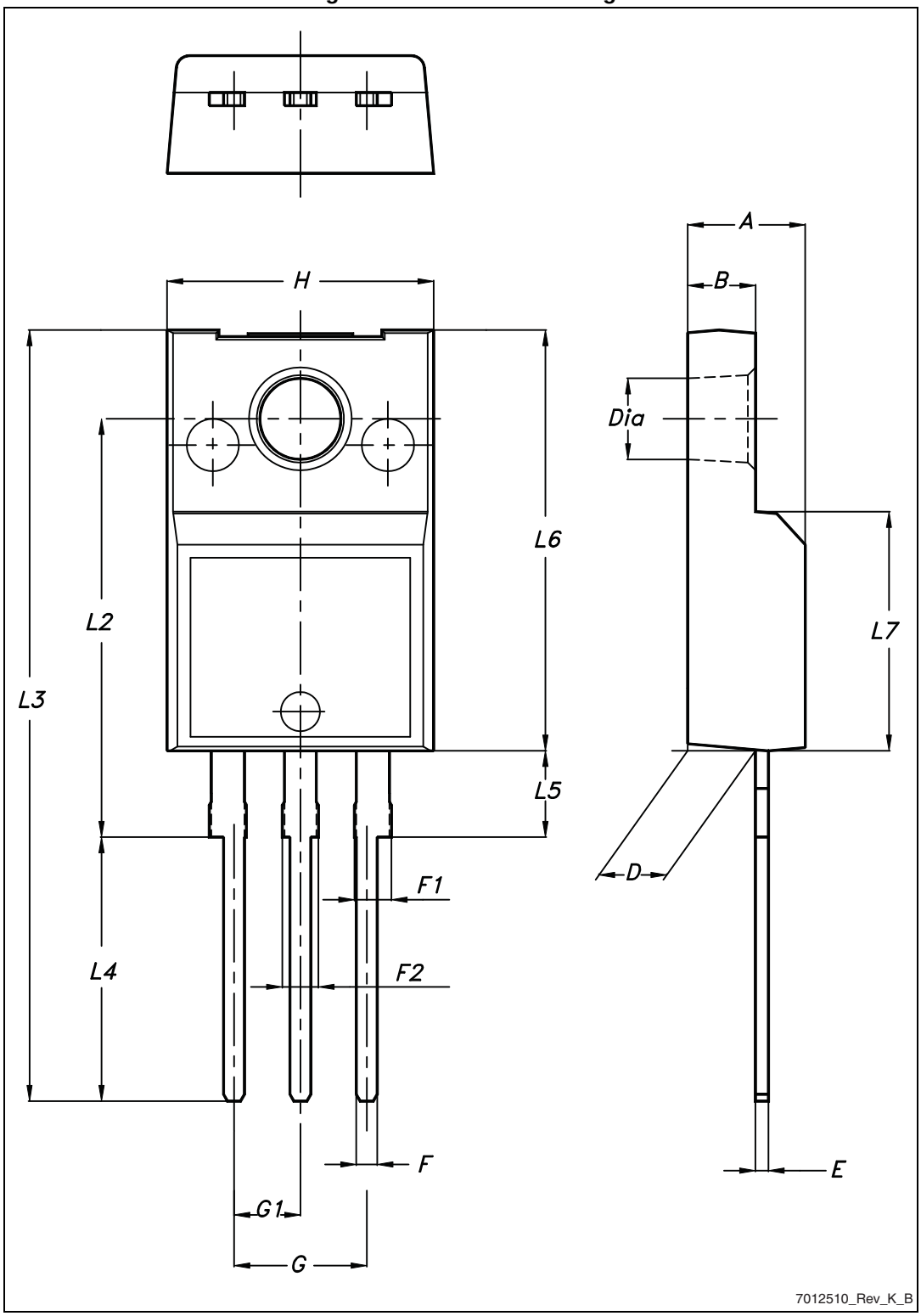

Table 8. TO-220FP mechanical data

Dim.	mm		
	Min.	Typ.	Max.
A	4.4		4.6
B	2.5		2.7
D	2.5		2.75
E	0.45		0.7
F	0.75		1
F1	1.15		1.70
F2	1.15		1.70
G	4.95		5.2
G1	2.4		2.7
H	10		10.4
L2		16	
L3	28.6		30.6
L4	9.8		10.6
L5	2.9		3.6
L6	15.9		16.4
L7	9		9.3
Ø	3		3.2

5 Revision history

Table 9. Document revision history

Date	Revision	Changes
25-Nov-2014	1	First release.
16-Jan-2015	2	In *Section 1*, updated *Table 2: Absolute maximum ratings* In *Section 2*, – updated *Table 4: On/off states* – updated *Table 5: Dynamic* – updated *Table 6: Switching times* – updated *Table 7: Source drain diode* Added *Section 2.1: Electrical characteristics (curves)*
10-Feb-2015	3	Inserted dV/dt value in *Table 2: Absolute maximum ratings*.

IMPORTANT NOTICE – PLEASE READ CAREFULLY

STMicroelectronics NV and its subsidiaries (“ST”) reserve the right to make changes, corrections, enhancements, modifications, and improvements to ST products and/or to this document at any time without notice. Purchasers should obtain the latest relevant information on ST products before placing orders. ST products are sold pursuant to ST’s terms and conditions of sale in place at the time of order acknowledgement.

Purchasers are solely responsible for the choice, selection, and use of ST products and ST assumes no liability for application assistance or the design of Purchasers’ products.

No license, express or implied, to any intellectual property right is granted by ST herein.

Resale of ST products with provisions different from the information set forth herein shall void any warranty granted by ST for such product.

ST and the ST logo are trademarks of ST. All other product or service names are the property of their respective owners.

Information in this document supersedes and replaces information previously supplied in any prior versions of this document.

© 2015 STMicroelectronics – All rights reserved